SALES & ENGINEERING DATA

RATIO SERIES:	10:1
FLUID P.S.I. RANGE:	300 - 1200

650866-XXD-B
TWO-BALL PUMP

RELEASED: 9-28-01
REVISED: 5-26-10
(REV. C) S-1017

DIMENSIONAL DATA

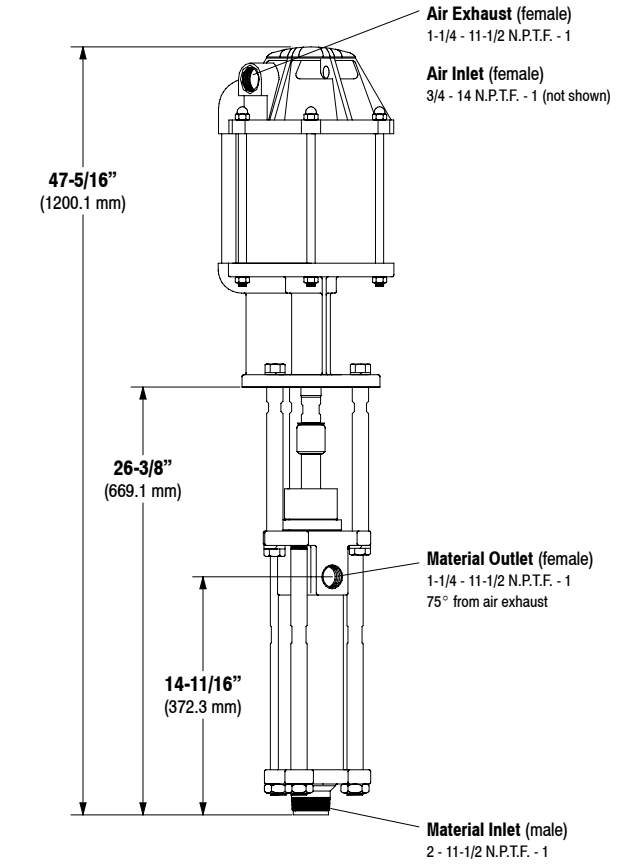

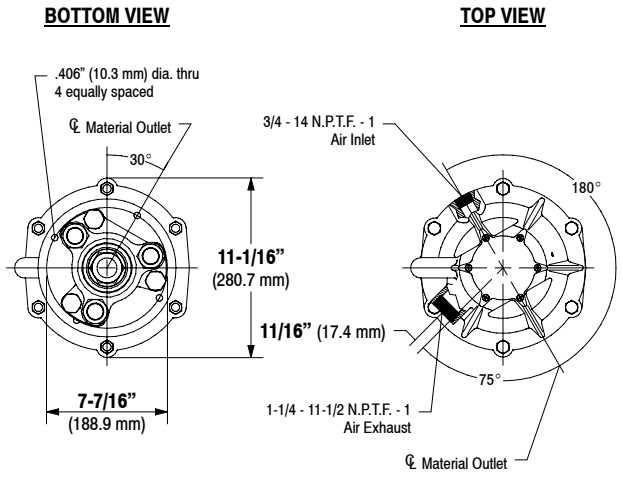

NOTE: Dimensions are shown in inches and (mm), supplied for reference only and are typically rounded up to the nearest 1/16 inch.

SPECIFICATIONS

CONSTRUCTION

Model Series (refer to option chart)	650866-XXD-B
Pump Type	Air Operated, Two-Ball, Double Acting Pump
Ratio	10:1
Air Motor	66523-B
Motor Repair Kit	66614
Motor Diameter	8" (203.2 mm)
Stroke	6" (152.4 mm)
Air Inlet (female)	3/4 - 14 N.P.T.F. - 1
Air Exhaust (female)	1-1/4 - 11-1/2 N.P.T.F. - 1
Lower Pump End Series	66941-XXD
Lower Pump Repair Kit	637211-X63

Packing Options:

C - UHMW-PE
K - Carbon-Graphite Filled PTFE with Nitrile Energizer
L - Mineral Filled PTFE
P - UHMW-PE / Mineral Filled PTFE staggered upper • UHMW-PE lower
R - Mineral Filled PTFE / UHMW-PE staggered upper • Mineral Filled PTFE lower

Material Inlet (male)	2 - 11-1/2 N.P.T.F. - 1
Material Outlet (female)	1-1/4 - 11-1/2 N.P.T.F. - 1

MATERIALS OF CONSTRUCTION

Outlet Body		316 Stainless Steel
Cylinder		15-5 Stainless Steel, Chrome plated
Plunger		15-5 Stainless Steel, Chrome plated
Upper Ball		440 Stainless Steel
Upper Seat	650866-X6D-B	440 Stainless Steel
	650866-XDD-B	Tungsten Carbide
Lower Ball		440 Stainless Steel
Lower Seat	650866-X6D-B	440 Stainless Steel
	650866-XDD-B	Tungsten Carbide
Inlet Body		316 Stainless Steel
Weight		102 lbs (46.3 kgs)

PERFORMANCE

Air Inlet Pressure Range	30 - 120 p.s.i. (2.1 - 8.3 bar)
Fluid Pressure Range	300 - 1200 p.s.i. (20.7 - 82.8 bar)
Maximum Rec'd Cycles / Minute	70
Displacement In^3 Per Cycle	59.8
Volume / Cycle	33.1 oz. (979.6 ml)
Cycles Per Gallon	3.9
Flow @ 70 Cycles / Minute	18.1 g.p.m. (68.6 l.p.m.)
Noise Level @ 60 p.s.i. - 40 c.p.m.	89.8 db(A)①

① Tested with 92460 Muffler installed. The pump sound pressure level has been updated to an Equivalent Continuous Sound Level (L_{Aeq}) to meet the intent of ANSI S1. 13-1971, CAGI-PNEUROP S5.1 using four microphone locations.

ACCESSORIES:
66542 Wall Mount Bracket
67187-1 Mounting Post
92460 Silencer

INGERSOLL RAND COMPANY LTD
209 NORTH MAIN STREET – BRYAN, OHIO 43506
(800) 495-0276 • FAX(800) 892-6276
www.ingersollrandproducts.com

© 2010
CCN 15269046

ARO
Ingersoll Rand
Industrial Technologies
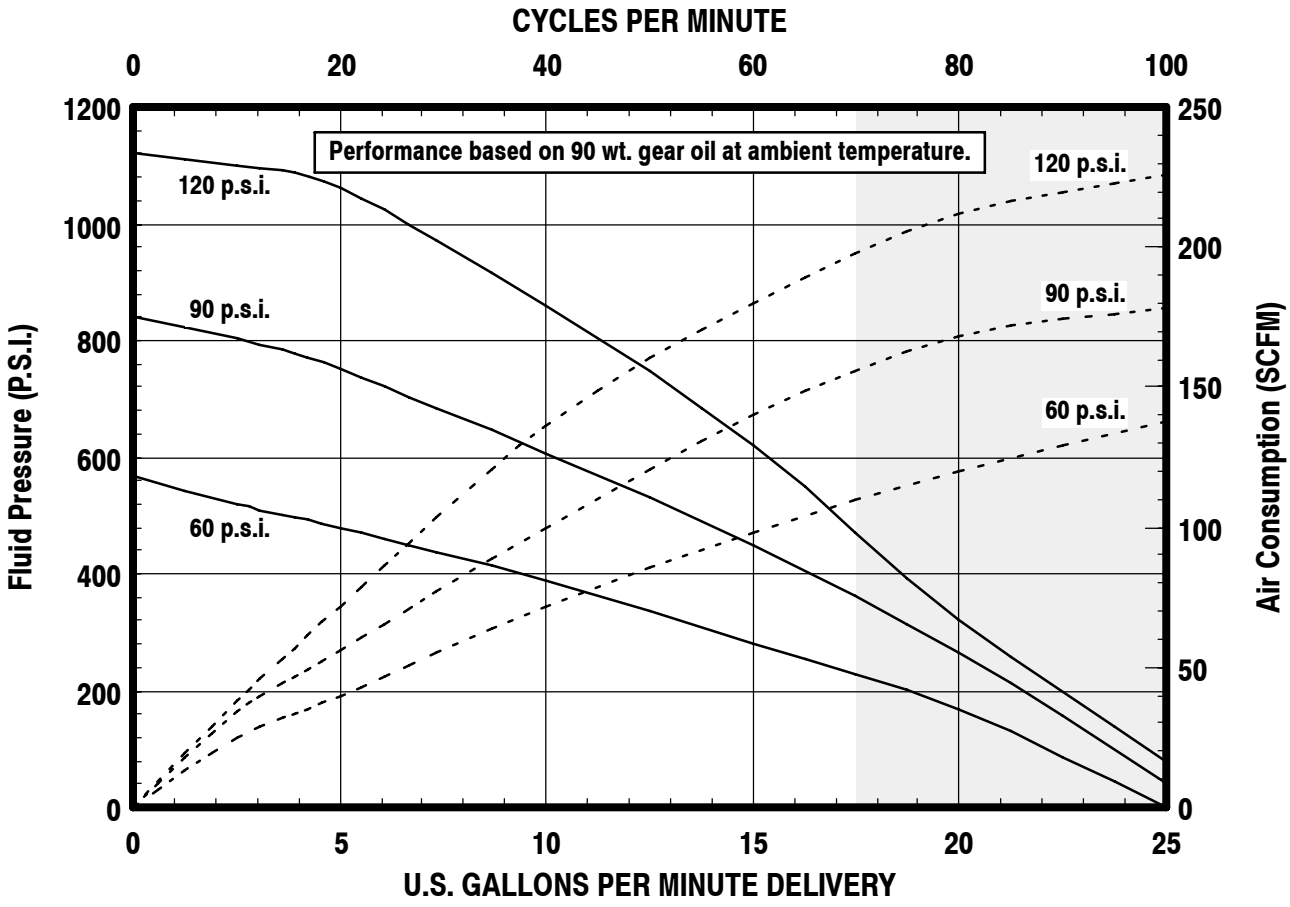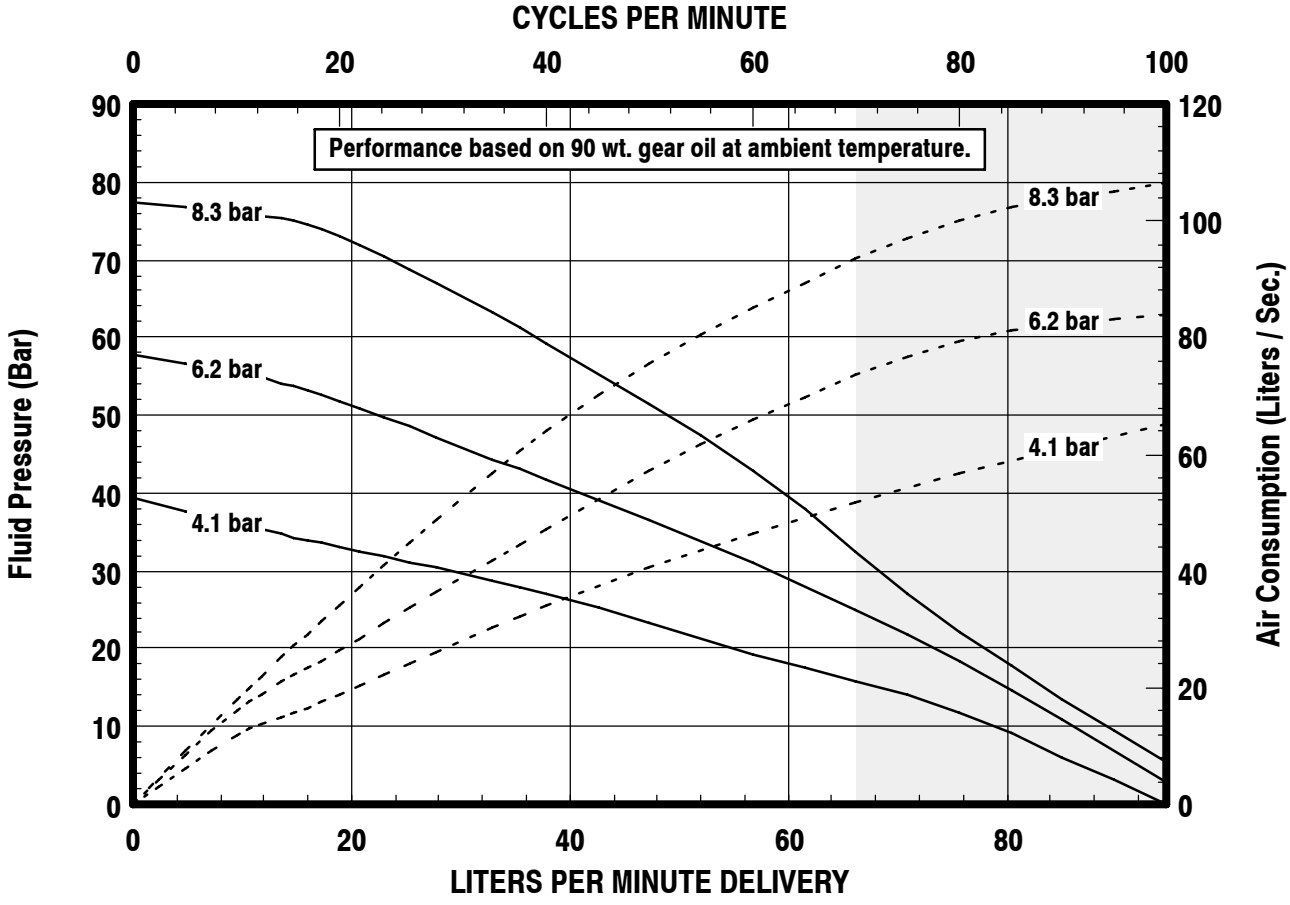
PERFORMANCE CURVES